A Practical Test Set for Comprehensive Crystal Testing

by

Chris Trask / N7ZWY
Sonoran Radio Research
P.O. Box 25240
Tempe, AZ 85285-5240

Senior Member IEEE

Email: christrask@earthlink.net

24 February 2008
Revised 6 March 2008

Introduction

As anyone who has done serious design of crystal filters can tell you, testing crystals for motional parameters (L_M, C_M, and R_M) can be a real chore. These parameters are not measurable by way of commonly available LCR meters, but instead require a dedicated test set. Commercial test equipment such as that made by Hewlett-Packard (now Agilent) and Saunders Associates provides superb accuracy and convenience, but is financially out of reach for most hobbyists.

By using a simple, and fairly common test procedure, an inexpensive test set with accuracy suitable for all but the most demanding applications can be made by those having good technical skills.

Crystal Models

First, let's become familiar with a simple equivalent model of a fundamental quartz crystal unit, meaning that the additonal model circuitry that describes the various overtones is not taken into consideration. Shown in Fig. 1, the crystal model consists of a motional inductance L_M, a motional capacitance C_M, a motional resistance R_M, and a parasitic holder capacitance C_O. The series resonant frequency of the crystal is simply:

$$f_S = \frac{1}{2\pi\sqrt{L_M C_M}} \qquad (1)$$

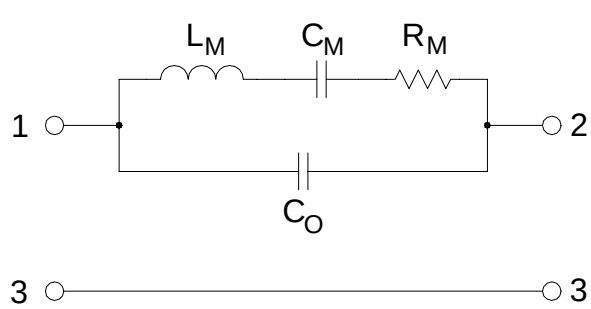

Figure 1 - Equivalent Circuit of Quartz Crystal

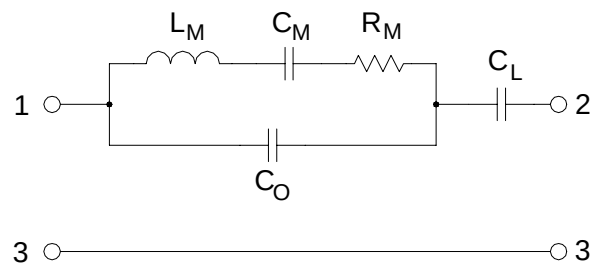

Figure 2 - Series Capacitance Testing Method

and the parallel resonant frequency is:

$$f_P = \frac{1}{2\pi\sqrt{L_M \frac{C_O C_M}{C_O + C_M}}} \qquad (2)$$

The Series Capacitance Testing Method

A simple method of testing quartz crystals is to measure the series-resonant frequency of the crystal, place a small, high-Q capacitor (such as silvered mica) in series, and then measure the series resonant frequency for a second time, a procedure which is known as the series capacitance testing method.

When placing the small capacitor in series with the crystal, the motional parameters and holder capacitance are altered. Using the equivalent model of the series-loaded crystal shown in Fig. 3, the motional inductance L_M is now:

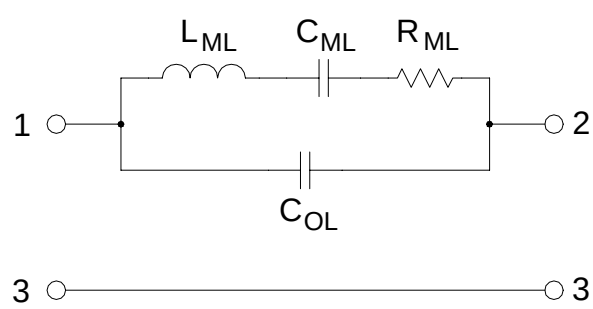

Figure 3 - Equivalent Circuit of Quartz Crystal with Series Capacitance

$$L_{ML} = \frac{L_M}{\left(1-\frac{C_O}{C_O+C_L}\right)^2} = L_M\left(1+\frac{C_O}{C_L}\right)^2 \quad (3)$$

the motional capacitance C_M is now:

$$C_{ML} = C_M \frac{\left(1-\frac{C_O}{C_O+C_L}\right)^2}{\left(1+\frac{C_M}{C_O+C_L}\right)} = C_M \frac{\left(\frac{C_L}{C_O+C_L}\right)^2}{\left(\frac{C_O+C_L+C_M}{C_O+C_L}\right)} = C_M \frac{C_L^{\,2}}{(C_O+C_L)(C_O+C_L+C_M)} \quad (4)$$

the motional resistance R_M is now:

$$R_{ML} = \frac{R_M}{\left(1-\frac{C_O}{C_O+C_L}\right)^2} = R_M\left(1+\frac{C_O}{C_L}\right)^2 \quad (5)$$

and the holder capacitance C_O becomes:

$$C_{OL} = C_O\left(1-\frac{C_O}{C_O+C_L}\right) = C_O\left(\frac{C_L}{C_O+C_L}\right) \quad (6)$$

In applying the series capacitance method, The series-resonant frequency of the crystal alone is measured (f_S), then the capacitor is placed in series and the series resonant frequency is measured again (f_L). At this point, the relationship between f_S and f_L is:

$$f_L = f_S\left(1+\frac{C_M}{2(C_O+C_L)}\right) \quad (7)$$

which allows us to easily calculate the value of the motional capacitance C_M as:

$$C_M = \frac{2(f_L - f_S)}{f_S}(C_O+C_L) \quad (8)$$

and the motional inductance L_M can then be determined by:

$$L_M = \frac{1}{C_M\,(2\pi f_S)^2} \quad (9)$$

Determining the value of the motional resistance R_M requires a little more effort. First, if we place the crystal in series with a known load resistance R_L and apply an input voltage V_2, the voltage V_1 across the load resistance will be:

$$V_{1S} = V_{2S}\frac{R_L}{R_L+R_M} \quad (10)$$

$$V_{1L} = V_{2L}\frac{R_L}{R_L+R_{ML}} \quad (11)$$

If V_2 is kept constant for both test conditions ($V_{2S} = V_{2L}$), then RM can be determined by way of:

$$R_M = R_L\frac{(V_{1S}-V_{1L})}{V_{1L}\left(1+\frac{C_O}{C_L}\right)^2 - V_{1S}} \quad (12)$$

All that's required now is to obtain a series-resonant crystal oscillator, a good quality series capacitor, and some fairly common test equipment.

The G3UUR Crystal Test Circuit

One circuit that has been popularized for applying the series-capacitance method was devised by G3UUR, shown in Fig. 4 (1, 2). Although this circuit is described as being series-resonant, it uses a Colpitts oscillator and is therefore parallel-resonant. The 470pF capacitors C3 and C4 are sufficiently large as to cause the pallel-resonant frequency of the crystal to

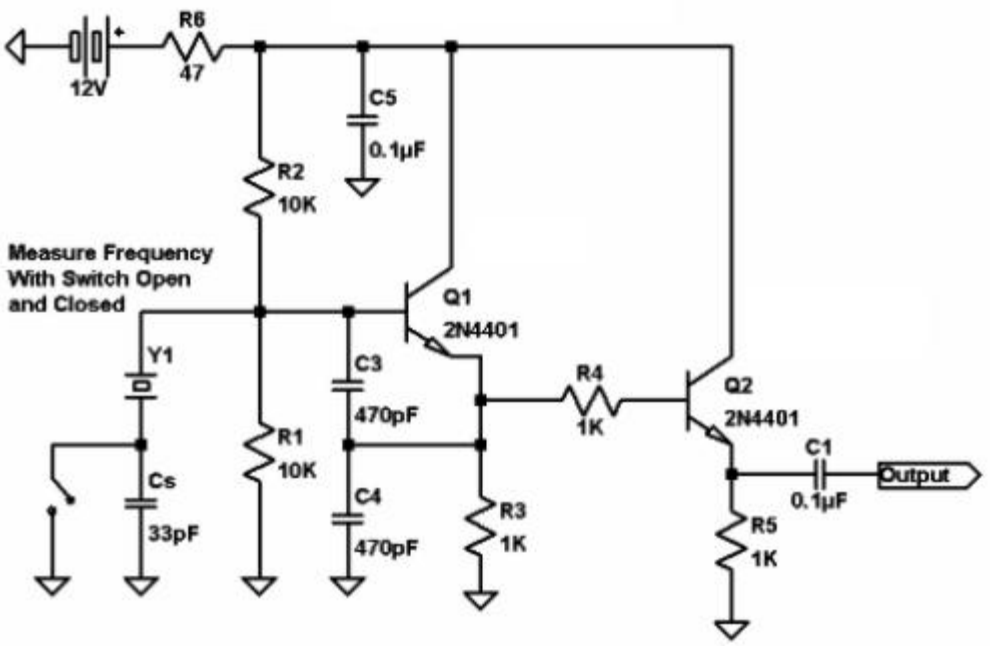

Figure 4 – G3UUR Crystal Test Circuit (from reference 2)

become much closer to the series-resonant frequency, and the result is a crude but useful approximation to the actual series-resonant frequency. Although this circuit is useful for general purposes, it is terribly inaccurate for those performing demanding design tasks such as narrow-band crystal filters.

A Practical Crystal Test Set

A block diagramme for a practical crystal test set is shown in Fig. 5. Here, the crystal is in series with a small capacitor, and test points are added to allow for measuring the signal voltage at both ends of the combination. The oscillator circuit includes an automatic level control (ALC) circuit that will prevent the oscillator from becoming saturated, a condition that would seriously impair the needed measurements. R_S and R_L are the oscillator source and load resistances, respectively.

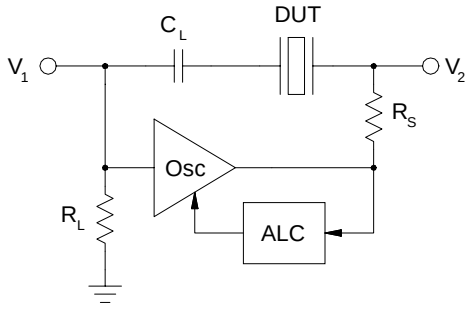

Figure 5 – Practical Crystal Test Set Functional Block Diagramme

Series-Resonant Crystal Oscillators

Very few circuits are available that make use of a crystal resonator at it's precise series-resonant frequency. The Pierce oscillator actually functions at a point where the crystal provides a 90º phase shift (ideally), a point which is between the series- and parallel-resonant frequencies of the crystal.

The Butler Series-Resonant Oscillator

A number of circuits that are capable of operating at the exact series-resonant frequency of the crystal were published by Butler in the in the June 1946 issue of Wireless World (3). One of the circuits, shown in solid-state form in Fig. 6, makes use of a tapped inductor (or autotransformer). This circuit is also known as a common-base Hartley oscillator.

This circuit is somewhat attractive for

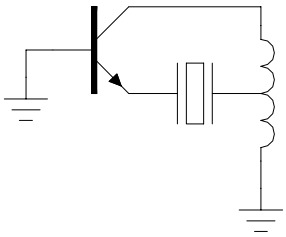

Figure 6 – Butler Series-Resonant Crystal Oscillator

crystal oscillators, however it places too much signal current through the crystal, which leads to accelerated aging and therefore sees little use. This circuit operates in a saturated môde, and is therefore not suitable for the test set of Fig. 5.

The Modified Butler Oscillator

An alternative to the circuit of Fig. 6 is to place the crystal between the base of the transistor and ground, which leads to very little signal current passing through the crystal, as shown in Fig. 7. This circuit is commonly referred to as the Modified Butler Oscillator, and sees wide usage in commercial design due to it's low noise and extended aging characteristics. This circuit also operates in a saturated môde, and as with the earlier circuit of Fig. 6 is not suitable for the test set of Fig. 5.

The Differential Butler Oscillator

A further modification of the basic Butler oscillator is shown in Fig. 8, which is commonly known as the differential Butler oscillator. Here, the crystal is connected from the base of the first transistor to the collector of the second,

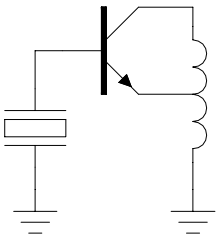

Figure 7 – Modified Butler Crystal Oscillator

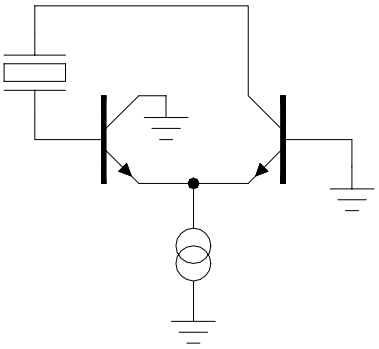

Figure 8 – Differential Series-Resonant Butler Crystal Oscillator

producing a circuit with positive feedback at the series-resonant frequency of the crystal. This circuit can be operated in a linear, non-saturated môde by controlling the tail current (the current source at the two emitters), and is therefore a suitable circuit for use in the test set of Fig. 5.

Implementation

The block diagramme of Fig. 9 shows the test set of Fig. 5 in more detail. Here, the differential Butler oscillator of Fig. 8 has been included, as well as a level detector and integrator for the ALC circuitry.

In the schematic diagramme of the test set shown in Fig. 10, transistors Q1, Q2, and Q4 are the differential Butler oscillator. The

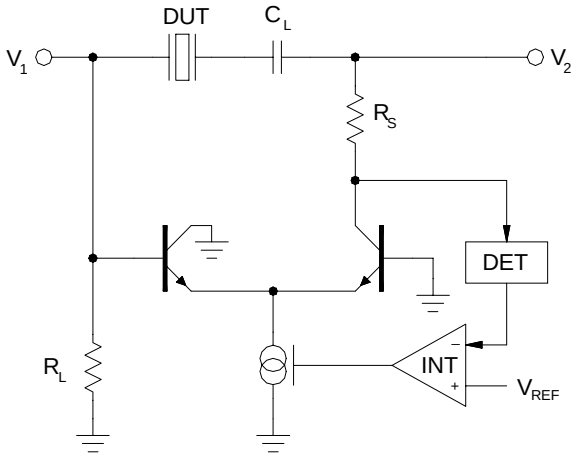

Figure 9 – Test Set Detailed Block Diagramme

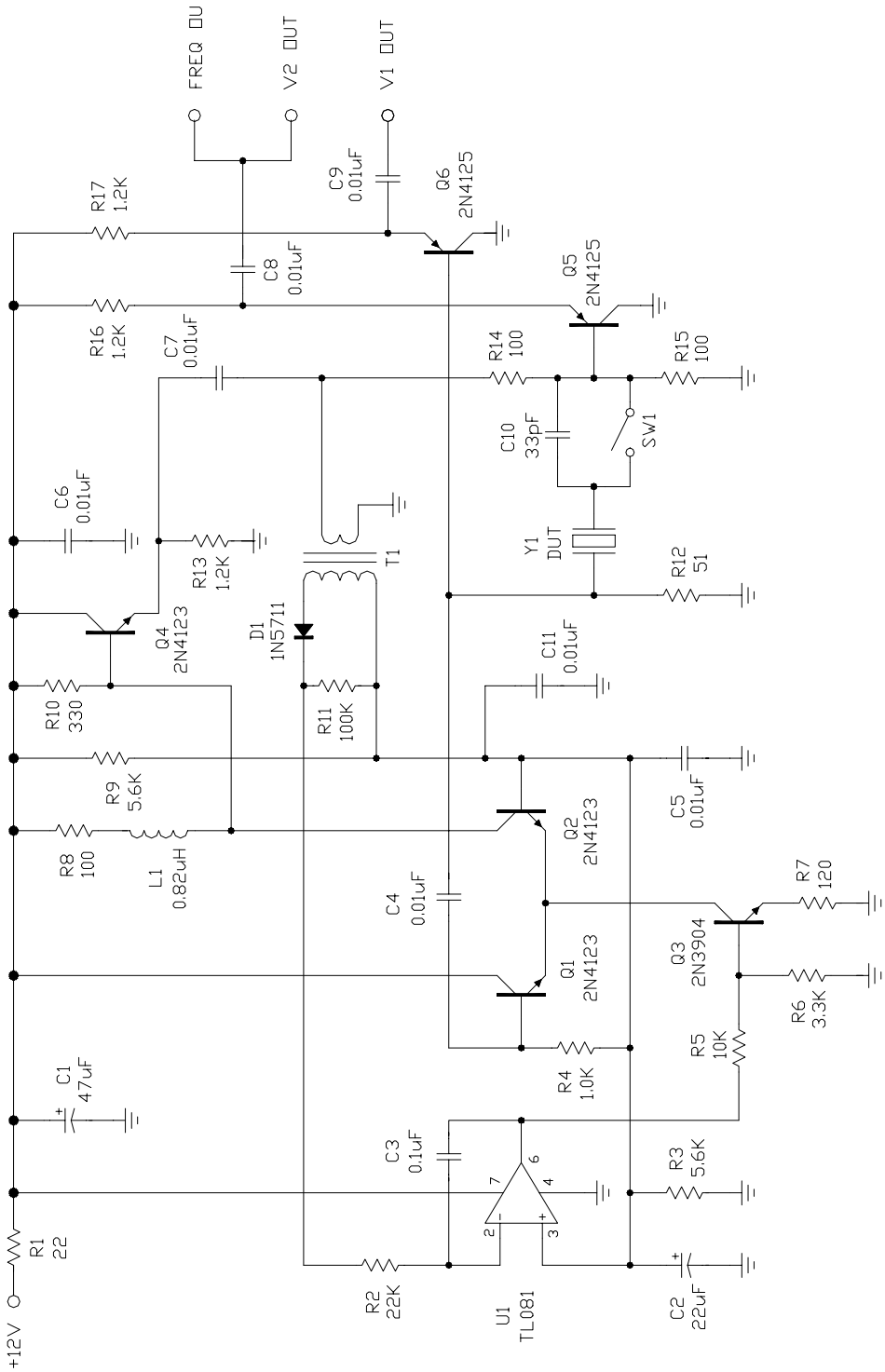

Figure 10 – Crystal Test Set Schematic

combination of R8, R10, and L1 is a peaking circuit that extends the usable frequency range of the test set to about 20MHz. Transistors Q5 and Q6 are emitter-follower buffer amplifiers between the test set circuit proper and the external test equipment, which are a frequency counter and a 2-channel oscilloscope.

Transformer T1 and diode D1 are the ALC level detector, and op amp U1 is the ALC level integrator. The turns ratio of transformer T1 is 2:1, and commercial transformers such as the Mini-Circuits T2-1T are suitable choices. Transistor Q3 is the ALC controlled current source.

Resistors R14 and R15 are the source resistors for the oscillator, while resistor R12 is the oscillator load resistance. Capacitor C10 is the series loading cpacitance, and this part should be a high-Q capacitor such as silvered mica. Switch SW1 is the series capacitance control.

Construction

It is essential that all leads be kept short, especially those that go from the circuit board to the crystal test socket, to the test switch, and then back to the circuit board. The series test capacitor C10 should be mounted directly on the switch. Every effort should be made to minimize any stray capacitance in this area of the circuit.

Calibration

To calibrate the test set you will need a fairly good quality capacitance meter, preferably a digital one that can provide one or preferably two decimal places. Simply disconnect the wire going from the circuitry to the crystal test socket as well as the wire going from the circuitry to the test switch SW1 (which has the test capacitor C10 mounted across it). Leave the switch open and measure the capacitance across the switch. Record this value (C_L) someplace convenient, such as a label on the test set itself. Next, measure the capacitance across the crystal test socket. Record this value (C_{TS}) as well.

Next, measure the value of the oscillator load resistance R12, using a good quality resistance meter, preferably a digital one that can provide one or preferably two decimal places. Record this value (R_L) as was done earlier for C_L and C_{TS}.

Operation

First, you will need to measure the holder capacitance C_O of the crystal using a good-quality capacitance meter, preferably a digital one that can provide one or preferably two decimal places such as the one used earlier in the calibration procedure.

Connect a frequency meter to the FREQ OUT port, and a 2-channel oscilloscope to the V1 OUT and V2 OUT ports. With the crystal to be tested mounted on the test set and the test switch CLOSED, measure f_S, V_{1S}, and V_{2S}. Next, with the test switch OPEN, measure f_L, V_{1L}, and V_{2L}. Now, calculate:

$$C_M = \frac{2\left(f_L - f_S\right)}{f_S}\left(C'_O + C_L\right) \tag{13}$$

where

$$C'_O = C_O + C_{TS} \tag{14}$$

as well as:

$$L_M = \frac{1}{C_M\left(2\pi f_S\right)^2} \tag{15}$$

and finally:

$$R_M = R_L \frac{\left(V_{1S} - \frac{V_{1L}V_{2S}}{V_{2L}}\right)}{\frac{V_{1L}V_{2S}}{V_{2L}}\left(1 + \frac{C'_O}{C_L}\right)^2 - V_{1S}} \tag{16}$$

References

1. Hayward. W., R. Campbell, and B. Larkin, *Experimental Methods in RF Design*, ARRL, 2003, pp. 3.18-3.19.
2. Smith, J.R., *Crystal Motional Parameters: A Comparison of Measurement Approaches*, 11 June 2006 (online publication).
3. Butler, F., "Series-Resonant Crystal Oscillators," *Wireless World*, June 1946, pp. 157-160.